# BORE GAGES

# Electronic Bore Gages

## 781BXT AccuBore® Electronic Bore Gages with Output

### .080"-8"/2-200MM

AccuBore is a high-quality, trigger-activated, two-point and three-point contact bore gaging system with extended range. Its convenient single-hand operation provides speed and control. Simply squeeze the trigger, insert the gage into the bore and release the trigger for an instant reading from the large, easy-to-read digital display.

What makes AccuBore superior to other gages are features like the mechanically-driven parallel anvils which extend simultaneously, establishing a more true alignment to the axis of the bore. This provides consistent pressure, resulting in more accurate readings than models with spring-driven contacts which are subject to pressure variations.

Speed and convenience are further enhanced by the repositionable AccuBore® indicator, which may be swiveled and rotated for left, right hand or even vertical viewing. The gage also features a set of "Go/No-Go" lights in the readout display that quickly indicates whether a bore measurement is within a preset tolerance.

### Features

- Bluetooth® capability
- Single-hand operation with right- and left-hand viewing flexibility
- Large, easy-to-read display
- Enhanced wear life with carbide-faced contacts – available from 1/2" to 8"
- Convenient "Go/No-Go" tolerance indicator lights
- True alignment with mechanically-driven parallel anvils
- Resolution .00005" (0.001mm)
- Accuracy of up to .00015" (.004mm)
- Push button inch/metric conversion
- Preset and preset recall
- Hold, max/min and zeroing capabilities
- Blind bore measurement is standard for .50" (12.7mm) and above
- Specialized heads available for thread, groove and other non-standard measurements on request
- Output capability for Statistical Process Control (SPC) analysis. Download data via USB to a PC or RS232 connection.

781BXTZ-138

### Bore Gage Measuring Tips

Whether to use a two-point or three-point contact measuring tool is usually a matter of preference, but there are some differences.

A two-point contact rod-type inside micrometer is usually lighter, easier to handle, and more versatile over long ranges from approximately 6-107" (150-2700mm).

Any two-point contact micrometer, regardless of range, can probe a hole better to find the geometry of that hole than a three-point contact.

Most three-point contact tools have setting rings to ensure accuracy. If you desire very close tolerance work with two-point contact inside micrometers, it is recommended that they be set to a ring gage or to an outside micrometer.

A three-point contact micrometer has an advantage in that it can be seated in position more quickly than a two-point contact tool.

Usually these tools can also be read to a finer accuracy. The three-point tool will tell the maximum true diameter that can enter the hole a little faster than a two-point contact tool.

Micrometer heads used in these tools are accurate to ±.0001" or 0.002mm, but overall accuracy on tools that add rods is dependent on good practice and technique.

To ensure accuracy, these practices should be followed:

- Always make sure that there are no specks of dirt between the clamping surfaces of the rods and micrometer heads
- Tighten all rods uniformly, not too tightly, not too loosely, but a fairly firm assembly
- Assembling long sections should be done vertically or, with support, horizontally
- Because temperature can affect long rods used in these tools, they should be assembled in the same environment in which they will be used

Output jack enables collection of measurement data for SPC analysis

AccuBore XT's indicator can be rotated, allowing easy reading from either the right or left hand, or when accessing difficult to reach holes

Sets include gage, contacts, setting rings, instructions, certificate of calibration and a 3v lithium battery in a protective carrying case

**781BXT AccuBore Electronic Bore Gages with Output – 2-Point Contact (.080-.250" (2-6mm) Range)**

| Cat. No. | EDP | Range in | Range mm | Accuracy in | Accuracy mm | Approx Meas. Depth in | Approx Meas. Depth mm | Ring Diameter in | Ring Diameter mm |
|---|---|---|---|---|---|---|---|---|---|
| 781BXTZ-100 | 73017 | .080-.100 | 2-2.5 | .00015 | .004 | 3/8 | 9 | .100 | 2.54 |
| 781BXTZ-120 | 73016 | .100-.120 | 2.5-3 | | | | | | |
| 781BXTZ-160 | 73014 | .120-.160 | 3-4 | .00015 | .004 | 1/2 | 12 | .160 | 4.06 |
| 781BXTZ-200 | 73012 | .160-.200 | 4-5 | .00015 | .004 | 3/4 | 18 | .200 | 5.08 |
| 781BXTZ-250 | 73011 | .200-.250 | 5-6 | | | | | | |

**781BXT AccuBore® Electronic Bore Gages with Output – 3-Point Contact (1/4-8" (6-200mm) Range) – Fixed Anvils**

| Cat. No. | EDP | Range in | Range mm | Accuracy in | Accuracy mm | Approx Meas. Depth in | Approx Meas. Depth mm | Ring Diameter in | Ring Diameter mm |
|---|---|---|---|---|---|---|---|---|---|
| 781BXTZ-312 | 73009 | 1/4-5/16 | 6-8 | .00015 | .004 | 2-1/4 | 58 | .3125 | 7.94 |
| 781BXTZ-375 | 73007 | 5/16-3/8 | 8-10 | | | | | | |
| 781BXTZ-500 | 73004 | 3/8-1/2 | 10-12.5 | .00015 | .004 | 2-1/4 | 58 | .500 | 12.7 |
| 781BXTZ-625 | 73002 | 1/2-5/8 | 12.5-16 | .00015 | .004 | 2-3/8 | 62 | .500 | 12.7 |
| 781BXTZ-750 | 73000 | 5/8-3/4 | 16-20 | | | | | .750 | 19.05 |
| 781BXTZ-1 | 73018 | 3/4-1 | 20-25 | .00015 | .004 | 2-5/8 | 66 | .750 | 19.05 |
| 781BXTZ-138 | 73015 | 1-1-3/8 | 25-35 | | | | | 1.375 | 34.93 |
| 781BXTZ-2 | 73013 | 1-3/8-2 | 35-50 | .00015 | .004 | 3-1/16 | 80 | 1.375 | 34.93 |
| 781BXTZ-258 | 73010 | 2-2-5/8 | 50-65 | .0002 | .005 | 3-1/16 | 80 | 2.625 | 65.68 |
| 781BXTZ-314 | 73008 | 2-5/8-3-1/4 | 65-80 | | | | | 3.250 | 82.55 |
| 781BXTZ-4 | 73006 | 3-1/4-4 | 80-100 | .0002 | .005 | 3-3/8 | 85 | 3.250 | 82.55 |
| 781BXTZ-5 | 73005 | 4-5 | 100-125 | .00025 | .006 | 4 | 100 | 5.0 | 127.00 |
| 781BXTZ-6 | 73003 | 5-6 | 125-150 | | | | | | |
| 781BXTZ-7 | 73001 | 6-7 | 150-175 | .0003 | .007 | 4 | 100 | 7.0 | 177.80 |
| 781BXTZ-8 | 72999 | 7-8 | 175-200 | | | | | | |

**Pistol Grip Gage Only with Indicator***

| Cat. No. | EDP | Range in | Range mm |
|---|---|---|---|
| 781BXTP-250 | 73021 | .080-.250 | 2-6 |
| 781BXTP-750 | 73019 | 1/4-3/4 | 6-20 |
| 781BXTP-4 | 73020 | 3/4-4 | 20-100 |
| 781BXTP-12** | 73022 | 4-8 | 100-200 |

Larger sizes available on special order.
Gages are also available with dial indicators on special order.
* Does not include heads, rings, etc.
** Heads above 8" available on special order.

# Electronic Bore Gages

## 781BXT AccuBore® Electronic Bore Gages

See specifications on previous pages

**781BXT AccuBore Electronic Bore Gage Set – 2-Point Contact (.080-.250" [2-6 mm] Range)**

| Cat. No. | EDP | Range in | Range mm | Number of Heads | Number of Rings |
|---|---|---|---|---|---|
| S781BXTBZ | 72998 | .080-.250 | 2-6 | 5 | 3 |

**781BXT AccuBore Electronic Bore Gage Sets –3-Point Contact (.250-8" [6-200mm] Range – Fixed Anvils)**

| Cat. No. | EDP | Range in | Range mm | Number of Heads | Number of Rings |
|---|---|---|---|---|---|
| S781BXTCZ | 72997 | .250-.375 | 6-10 | 2 | 1 |
| S781BXTHZ | 72992 | .250-.750 | 6-20 | 5 | 3 |
| S781BXTDZ | 72996 | .375-.750 | 10-20 | 3 | 2 |
| S781BXTEZ | 72995 | .750-2.00 | 20-50 | 3 | 3 |
| S781BXTJZ | 72991 | .750-4.00 | 20-100 | 6 | 4 |
| S781BXTFZ | 72994 | 2.00-4.00 | 50-100 | 3 | 2 |
| S781BXTKZ | 72990 | 4.00-6.00 | 100-150 | 2 | 1 |
| S781BXTGZ | 72993 | 4.00-8.00 | 100-200 | 4 | 4 |
| S781BXTLZ | 72989 | 6.00-8.00 | 150-200 | 2 | 1 |

Larger sizes available on special order.
Gages are also available with dial indicators on special order.

**Accessories for 781BXT Electronic Internal Micrometers**

| Part No. | EDP | Description | Required for Initial Bluetooth® Connection 1 Device | > 1 Devices |
|---|---|---|---|---|
| PT61055 | 72941 | 770B Output Cable to USB | | |
| PT61057 | 72942 | 770B Output Cable to USB with Footswitch | | |
| | | Free VMUX Software - 1 channel; visit starrett.com | x | |
| PT02497 | 73447 | Bluetooth® 4.0 dongle to PC VMUX Lite (1channel); VMUX standard (8 channels) | x | x |
| PT60996 | 72945 | VMUX Standard Software (up to 32 tools) | | x |
| PT99492 | 65650 | Two 3-Volt Batteries, CR2032 | | |
| PT02498 | 73024 | Bluetooth® 4.0 Indicator for 0.080-0.75" gages | | |
| PT02499 | 73025 | Bluetooth® 4.0 Indicator for 0.75-12" gages | | |

Larger sizes available on special order.
Gages are also available with dial indicators on special order.

Extensions from 2-1/2 - 6" can be added to the 781XT, enabling internal measurements in deep hole bores

781BXTZ-500

S781BXTGZ

770BXTZ-250 Bore Gage with PT24272 Depth Stop Collar

# Electronic Bore Gages

## 770BXT Electronic Bore Gages with IP67 Protection (with output)

### .080-12"/2-300MM

770BXT Electronic Internal Micrometers provide IP67 level of protection against coolant, water, dirt and dust in hostile shop environments. In addition, they offer extended travel, reducing the need to exchange anvils.

770BXTZ-138

### Features

- Wide measurement range without changing anvils
- Resolution to .00005" (0.001mm)
- Large high-contrast LCD digital readout is easy to read and reduces error
- RS232, USB, wireless output
- Carbide measuring faces on sizes above 1/2" (12.5mm) diameter
- Extensions available for deep holes
- Includes instant inch/millimeter conversion and preset + and - functions
- Precision ratchet stop provides correct contact pressure for accurate readings
- Each micrometer bore gage with head comes with a wooden case, complete with setting ring, contacts, adjusting wrench, spare battery, and instructions

**780XT Electronic Internal Micrometers, 2-Point Contact (.080-.250" (2-6mm) Range)**

| Cat. No. | EDP | Range in | Range mm | Accuracy in | Accuracy mm | Approx. Meas. Depth in | Approx. Meas. Depth mm | Ring Diameter in | Ring Diameter mm |
|---|---|---|---|---|---|---|---|---|---|
| 770BXTZ-100 | 72539 | .080-.100 | 2-2.5 | .00015 | .004 | 3/8 | 9 | .100" | 2.54 |
| 770BXTZ-120 | 72540 | .100-.120 | 2.5-3 | | | | | | |
| 770BXTZ-160 | 72541 | .120-.160 | 3-4 | .00015 | .004 | 15/32 | 12 | .160" | 4.06 |
| 770BXTZ-200 | 72542 | .160-.200 | 4-5 | .00015 | .004 | 3/4 | 18 | .160" | 4.06 |
| 770BXTZ-250 | 72543 | .200-.250 | 5-6 | .00015 | .004 | 3/4 | 18 | .200" | 5.08 |

**780XT Electronic Internal Micrometers, 3-Point Contact (1/4-12" (6-300mm) Range), Fixed Anvils**

| Cat. No. | EDP | Range in | Range mm | Accuracy in | Accuracy mm | Approx. Meas. Depth in | Approx. Meas. Depth mm | Ring Diameter in | Ring Diameter mm |
|---|---|---|---|---|---|---|---|---|---|
| 770BXTZ-312 | 72544 | 1/4 – 5/16 | 6-8 | .00015 | .004 | 2-1/4 | 58 | .3125 | 7.94 |
| 770BXTZ-375 | 72545 | 5/16 – 3/8 | 8-10 | | | | | | |
| 770BXTZ-500 | 72546 | 3/8 – 1/2 | 10-12.5 | .00015 | .004 | 2-1/4 | 58 | .500 | 12.7 |
| 770BXTZ-625 | 72547 | 1/2 – 5/8 | 12.5-16 | .00015 | .004 | 2-3/8 | 62 | .500 | 12.7 |
| 770BXTZ-750 | 72548 | 5/8 – 3/4 | 16-20 | .00015 | .004 | 2-5/8 | 66 | .750 | 19.05 |
| 770BXTZ-1 | 72549 | 3/4 – 1 | 20-25 | | | | | | |
| 770BXTZ-138 | 72562 | 1 – 1-3/8 | 25-35 | .00015 | .004 | 3-1/16 | 80 | 1.375 | 34.93 |
| 770BXTZ-2 | 72563 | 1-3/8 – 2 | 35-50 | | | | | | |
| 770BXTZ-258 | 72564 | 2 – 2-5/8 | 50-65 | .00020 | .005 | 3-1/16 | 80 | 2.625 | 65.68 |
| 770BXTZ-314 | 72566 | 2-5/8–3-1/4 | 65-80 | | | | | | |
| 770BXTZ-4 | 72567 | 3-1/4 – 4 | 80-100 | .00020 | .005 | 4 | 100 | 3.250 | 82.55 |
| 770BXTZ-5 | 72568 | 4 – 5 | 100-125 | .00025 | .006 | 4-1/2 | 115 | 5.0 | 127.00 |
| 770BXTZ-6 | 72569 | 5 – 6 | 125-150 | | | | | | |
| 770BXTZ-7 | 72570 | 6 – 7 | 150-175 | .00030 | .007 | 4-1/2 | 115 | 7.0 | 177.80 |
| 770BXTZ-8 | 72571 | 7 – 8 | 175-200 | | | | | | |
| 770BXTZ-9 | 72572 | 8 – 9 | 200-225 | .00030 | .007 | 4-5/8 | 118 | 9.0 | 228.60 |
| 770BXTZ-10 | 72573 | 9 – 10 | 225-250 | | | | | | |
| 770BXTZ-11 | 72574 | 10 – 11 | 250-275 | .00035 | .009 | 4-5/8 | 118 | 11.0 | 279.40 |
| 770BXTZ-12 | 72575 | 11 – 12 | 275-300 | | | | | | |

See next page for sets.

**Accessories for 770BXT Electronic Internal Micrometers**

| Part No. | EDP | Description | Required for Initial Bluetooth® Connection 1 Device | Required for Initial Bluetooth® Connection > 1 Devices |
|---|---|---|---|---|
| PT61055 | 72941 | 770B Output Cable to USB | | |
| PT61057 | 72942 | 770B Output Cable to USB with Footswitch | | |
| | | Free VMUX Software - 1 channel; visit starrett.com | x | |
| PT02497 | 73447 | Bluetooth® 4.0 dongle to PC Vmux Lite (1channel); VMUX standard (8 channels) | x | x |
| PT60996 | 72945 | VMUX Standard Software (up to 32 tools) | | x |
| PT99492 | 65650 | Two 3-Volt Batteries, CR2032 | | |

See next page for sets.

## IP PROTECTION

An IP number is composed of two numbers, the first referring to protection against solid objects and the second against liquids.

**First number 6**: Totally protected against dust

**Second number 7**: Protection against submersion in water under standardized conditions of pressure for 30 minutes

# Electronic Bore Gages

## 770BXT Electronic Bore Gages with IP67 Protection (with output)

See specifications on previous page

| 770BXT Electronic Internal Micrometer Sets, 2-Point Contact (.080-.250" [2-6mm] Range) | | | | | |
|---|---|---|---|---|---|
| | | Range | | | |
| Cat. No. | EDP | in | mm | Number of Heads | Number of Rings |
| S770BXTBZ | 72576 | .080-.250 | 2-6 | | |

| 770BXT Electronic Internal Micrometer Sets, 3-Point Contact (1/4-8" [6-200mm] Range), Fixed anvils | | | | | |
|---|---|---|---|---|---|
| | | Range | | | |
| Cat. No. | EDP | in | mm | Number of Heads | Number of Rings |
| S770BXTCZ | 72577 | 1/4-3/8 | 6-10 | 2 | 1 |
| S770BXTDZ | 72578 | 3/8-3/4 | 10-20 | 3 | 2 |
| S770BXTEZ | 72579 | 3/4-2 | 20-50 | 3 | 2 |
| S770BXTFZ | 72580 | 2-4 | 50-100 | 3 | 2 |
| S770BXTKZ | 72581 | 4-6 | 100-150 | 2 | 1 |
| S770BXTGZ | 72582 | 4-8 | 100-200 | 4 | 2 |
| S770BXTLZ | 72583 | 6-8 | 150-200 | 2 | 1 |

S770BXTKZ

# Vernier Bore Gages

## 78XT Bore Gages

### .080-12"/1-300MM

The 78XT Bore Gages feature extended travel, reducing the need to exchange anvils. The ground contact points seat the internal micrometer faster and more accurately than the spherical contacts found in other gages. These rugged and accurate internal micrometers are available individually or in economical sets from .080-12" (2-300mm).

| 78XT Bore Gages, 2-Point Contact (.080-.250" Range) | | | | | |
|---|---|---|---|---|---|
| Cat. No. | EDP | Range (in) | Accuracy (in) | Approximate Measuring Depth (in) | Setting Ring Diameter (in) |
| 78XTZ-100 | 68124 | .080-.100 | 0.00015 | 3/8 | .100 |
| 78XTZ-120 | 68125 | .100-.120 | | | |
| 78XTZ-160 | 68126 | .120-.160 | 0.00015 | 15/32 | .160 |
| 78XTZ-200 | 68127 | .160-.200 | 0.00015 | 3/4 | .160 |
| 78XTZ-250 | 68128 | .200-.250 | | | .200 |
| **78XT Bore Gages, 3-Point Contact (1/4-12" Range)** | | | | | |
| Cat. No. | EDP | Range (in) | Accuracy (in) | Approximate Measuring Depth (in) | Setting Ring Diameter (in) |
| 78XTZ-312 | 68129 | 1/4-5/16 | .00015 | 2-1/4 | .3125 |
| 78XTZ-375 | 68130 | 5/16-3/8 | | | .3125 |
| 78XTZ-500 | 68131 | 3/8-1/2 | | | .500 |
| 78XTZ-625 | 68132 | 1/2-5/8 | .00015 | 2-7/16 | .500 |
| 78XTZ-750 | 68133 | 5/8-3/4 | | | .750 |
| 78XTZ-1 | 68134 | 3/4-1 | .00015 | 2-5/8 | .750 |
| 78XTZ-138 | 67674 | 1-1-3/8 | | | 1.375 |
| 78XTZ-2 | 67675 | 1-3/8-2 | .00015 | 3-1/16 | 1.375 |
| 78XTZ-258 | 67676 | 2-2-5/8 | .00020 | 3-1/16 | 2.625 |
| 78XTZ-314 | 67677 | 2-5/8-3-1/4 | | | |
| 78XTZ-4 | 67678 | 3-1/4-4 | .00020 | 4 | 3.250 |
| 78XTZ-5 | 67679 | 4-5 | .00025 | 4 | 5.0 |
| 78XTZ-6 | 67680 | 5-6 | .00025 | 4-1/2 | 5.0 |
| 78XTZ-7 | 67681 | 6-7 | .00030 | 4-1/2 | 7.0 |
| 78XTZ-8 | 67682 | 7- 8 | | | 7.0 |
| 78XTZ-9 | 67857 | 8-9 | | | 9.0 |
| 78XTZ-10 | 67858 | 9-10 | .00030 | 4-5/8 | 9.0 |
| 78XTZ-11 | 67859 | 10-11 | .00035 | 4-5/8 | 11.0 |
| 78XTZ-12 | 67860 | 11-12 | | | |

| 78XT Sets, 2-Point Contact (.250" Range) | | | | |
|---|---|---|---|---|
| Cat. No. | EDP | Range (in) | Number of Heads | Number of Rings |
| S78XTBZ | 68152 | .120-.250 | 3 | 2 |
| **78XT Sets, 3-Point Contact (1/4-4" Range)** | | | | |
| Cat. No. | EDP | Range (in) | Number of Heads | Number of Rings |
| S78XTCZ | 68153 | 1/4-3/8 | 2 | 1 |
| S78XTDZ | 68154 | 3/8-3/4 | 3 | 2 |
| S78XTEZ | 67683 | 3/4-2 | 3 | 2 |
| S78XTFZ | 67684 | 2-4 | 3 | 2 |

78XTZ-2

### Features

- Wide measurement range without changing anvils
- Resolution from .0001" (0.0025mm) on the 2-point contact toolsup to 3/4" (20mm) and .00025" (0.005mm) on the 3-point contact tools ranging from 3/4"-12" (20mm - 300mm)
- Tungsten carbide measuring faces on all 3-point heads above 1/2" (12.5mm)
- Ratchet stop ensures consistent measurements
- Self-centering contacts for true readings
- Blind bore measuring capability above 1/2" (12.5mm) diameter
- Extensions available up to 6" (150mm) for deep hole measuring
- Setting rings included
- Depth stop/collar also available for .080"-.250" (1-6mm) range
- Each micrometer bore gage is furnished in a case, complete with setting ring, contacts, wrenches, and instructions

78XTZ-138 measuring a bore.

# Electronic Bore Gages

## 78MXT Bore Gages

See specifications on previous page

| 78MXT Bore Gages, 2-Point Contact (1-6mm Range) | | | | | |
|---|---|---|---|---|---|
| Cat. No. | EDP | Range (mm) | Accuracy (mm) | Approximate Measuring Depth (mm) | Setting Ring Dia (mm) |
| 78MXTZ-1.15 | 68135 | 1-1.15 | 0.003 | 6 | 1 |
| 78MXTZ-1.3 | 68136 | 1.15-1.3 | 0.003 | 6 | 1.3 |
| 78MXTZ-1.5 | 68137 | 1.3-1.5 | | | |
| 78MXTZ-1.75 | 68138 | 1.5-1.75 | 0.003 | 8 | 1.75 |
| 78MXTZ-2 | 68139 | 1.75-2 | | | |
| 78MXTZ-2.5 | 68140 | 2-2.5 | 0.004 | 9 | 2.5 |
| 78MXTZ-3 | 68141 | 2.5-3 | | | |
| 78MXTZ-4 | 68142 | 3-4 | 0.004 | 12 | 4 |
| 78MXTZ-5 | 68143 | 4-5 | 0.004 | 18 | 4 |
| 78MXTZ-6 | 68144 | 5-6 | 0.004 | 18 | 5 |
| **78MXT Bore Gages, 3-Point Contact (6-300mm Range)** | | | | | |
| Cat. No. | EDP | Range (mm) | Accuracy (mm) | Approximate Measuring Depth (mm) | Setting Ring Dia (mm) |
| 78MXTZ-8 | 68145 | 6-8mm | 0.004 | 58 | 8 |
| 78MXTZ-10 | 68146 | 8-10mm | | | |
| 78MXTZ-12.5 | 68147 | 10-12.5mm | 0.004 | 58 | 12.5 |
| 78MXTZ-16 | 68148 | 12.5-16mm | 0.004 | 62 | 12.5 |
| 78MXTZ-20 | 68149 | 16-20mm | 0.004 | 62 | 20 |
| 78MXTZ-25 | 68150 | 20-25mm | 0.004 | 66 | 20 |
| 78MXTZ-35 | 67861 | 25-35mm | 0.004 | 66 | 35 |
| 78MXTZ-50 | 67862 | 35-50mm | 0.004 | 80 | 35 |
| 78MXTZ-65 | 67863 | 50-65mm | 0.005 | 80 | 65 |
| 78MXTZ-80 | 68650 | 65-80mm | | | |
| 78MXTZ-100 | 67864 | 80-100mm | 0.005 | 100 | 80 |
| 78MXTZ-125 | 67865 | 100-125mm | 0.006 | 115 | 125 |
| 78MXTZ-150 | 67866 | 125-150mm | | | |
| 78MXTZ-175 | 67867 | 150-175mm | 0.007 | 115 | 175 |
| 78MXTZ-200 | 67868 | 175-200mm | | | |
| 78MXTZ-225 | 67869 | 200-225mm | 0.008 | 118 | 225 |
| 78MXTZ-250 | 67870 | 225-250mm | | | |
| 78MXTZ-275 | 67871 | 250-275mm | 0.009 | 118 | 275 |
| 78MXTZ-300 | 67872 | 275-300mm | | | |

| 78MXT Sets, 2-Point Contact (2-6mm Range) | | | | |
|---|---|---|---|---|
| Cat. No. | EDP | Range (mm) | Number of Heads | Number of Rings |
| S78MXTAZ | 68155 | 2-3 | 2 | 1 |
| S78MXTBZ | 68156 | 3-6 | 3 | 2 |
| **78XT Sets, 3-Point Contact (6-100mm Range)** | | | | |
| Cat. No. | EDP | Range (mm) | Number of Heads | Number of Rings |
| S78MXTCZ | 68157 | 6-10 | 2 | 1 |
| S78MXTDZ | 68158 | 10-20 | 3 | 2 |
| S78MXTEZ | 67873 | 20-50 | 3 | 2 |
| S78MXTFZ | 67874 | 50-100 | 3 | 2 |

78MXTZ-100

780MXTZ-150 in case

# Additional Options for 781B, 770B, 78 Bore Gages

## Spare Measuring Heads

| Cat. No. | EDP | Range (in) |
|---|---|---|
| HEAD100 | 73075 | 0.080-0.100 |
| HEAD120 | 73078 | 0.100-0.120 |
| HEAD160 | 73080 | 0.120-0.160 |
| HEAD200 | 73082 | 0.160-0.200 |
| HEAD250 | 73083 | 0.200-0.250 |
| HEAD312 | 73085 | 1/4-5/16 |
| HEAD375 | 73087 | 5/16-3/8 |
| HEAD500 | 73090 | 3/8-1/2 |
| HEAD625 | 73092 | 1/2-5/8 |
| HEAD750 | 73094 | 5/8-3/4 |
| HEAD1 | 73073 | 3/4-1.0 |
| HEAD138 | 73079 | 1-1-3/8 |
| HEAD2 | 73081 | 1-3/8-2 |
| HEAD258 | 73084 | 2-2 5/8 |
| HEAD314 | 73086 | 2-5/8-3-1/4 |
| HEAD4 | 73088 | 3-1/4-4 |
| HEAD5 | 73089 | 4.0-5.0 |
| HEAD6 | 73091 | 5.0-6.0 |
| HEAD7 | 73093 | 6.0-7.0 |
| HEAD8 | 73095 | 7.0-8.0 |
| HEAD9 | 73096 | 8.0-9.0 |
| HEAD10 | 73074 | 9.0-10.0 |
| HEAD11 | 73076 | 10.0-11.0 |
| HEAD12 | 73077 | 11.0-12.0 |

## Spare Setting Rings

| Cat. No. | EDP | Range (in) |
|---|---|---|
| RING100 | 73097 | 0.1000 |
| RING160 | 73100 | 0.1600 |
| RING200 | 73101 | 0.2000 |
| RING312 | 73103 | 5/16 |
| RING500 | 73106 | 1/2 |
| RING750 | 73108 | 3/4 |
| RING138 | 73099 | 1-3/8 |
| RING258 | 73102 | 2-5/8 |
| RING314 | 73104 | 3-1/4 |
| RING5 | 73105 | 5 |
| RING7 | 73107 | 7 |
| RING9 | 73109 | 9 |
| RING11 | 73098 | 11 |

HEAD4

HEAD250

HEAD2

RING9

RING5

## Inreach Extensions for 770B, 781B, 781 Bore Gages

Extensions from 2-1/2 - 6" can be added to both the 770BXT and 78XT, enabling internal measurements in deep hole bores (Multiple extensions can also be used).

**Internal Extensions**

| Cat. No. | EDP | Ext. Size in | Ext. Size mm | Fits Models | Model Size in | Model Size mm |
|---|---|---|---|---|---|---|
| 78/782F | 65484 | 2.5 | 63 | 78XT/770BXT/781BXT–312-375 | 1/4-3/8 | 6-10 |
| 78/782G | 65485 | 3 | 75 | 78XT/770BXT/781BXT–375-500 | 3/8-1/2 | 10-12.5 |
| 78/782H | 65486 | 4 | 100 | 78XT/770BXT/781BXT–625-750 | 1/2-3/4 | 12.5-20 |
| 78/782J | 65487 | 6 | 150 | 78XT/770BXT/781BXT–1 thru 2 | 3/4-2 | 20-50 |
| 78/782K | 65488 | 6 | 150 | 78XT/770BXT/781BXT–2 thru 12 | 2-12 | 50-300 |

78-782J with 770BZ-2

# Special Bore Gage Measuring Heads

We offer several configurations of special purpose measuring heads for 780, and 781 Bore Gages, available by special order. Some, but not all, of these will also work with the 78 Bore Gages.

## Groove Measuring Heads

- **Groove.** Available as a 2-point system for ovality measurement.
- Various 2-point anvil forms available with diameters from .080-12" (2-300mm).
- **Grooves.** Available as a 3-point system
- Various 3-point anvil forms available for diameters from .250-12" (6-300mm).

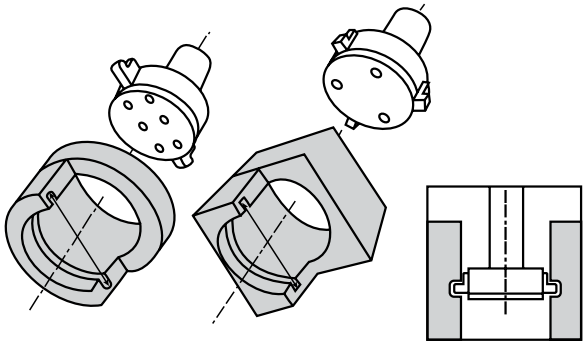

## Thread Measuring Heads

Thread Measuring Heads are available as two point system from 8 to 5/16" (M4-8mm) and three point system from 3/8"-12" (9.5-300mm). Most forms available including UNC, UNF, UNJ, UNS, Buttress, Acme, Multi-start, LH and RH.

- **Thread.** Thread forms available as a 3-point system.
- **Internal.** To measure effective (functional) diameter, pitch diameter.
- Available as two point system from 8 to 5/16" (M4-8mm) Available as three point system from 3/8"-12" (9.5-300mm).
- Most forms available including UNC, UNF, UNJ, UNS, Buttress, Acme, Multi-start, LH and RH.

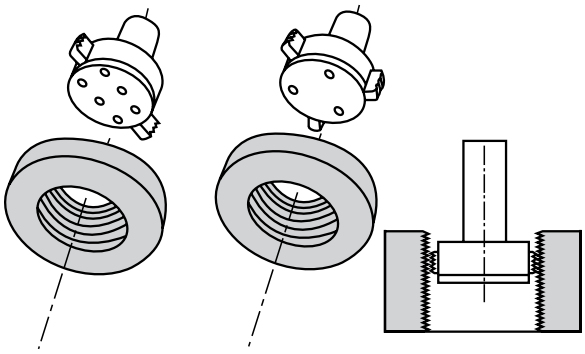

## Spherical Radius Measuring Heads

- **Spherical Radius.** Available as 2-point to measure ovality or with 3-point contact.
- Available with diameters from .236-3.93" (6-100mm).
- **3-Point Spherical.** Available in .118-12" (3-300mm) range.
- Gives good repeatability even when somewhat out of line with bore center.

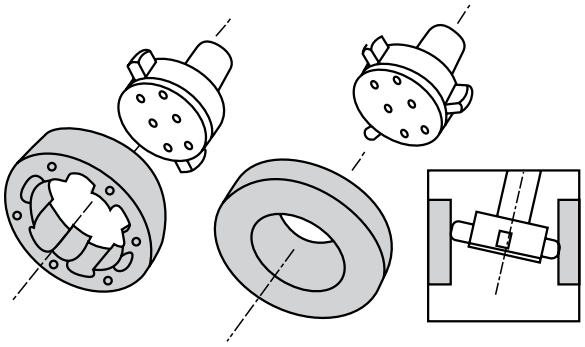

# Dial Bore Gages

NEW!

## 3089 Dial Bore Gages

The 3089 Dial Bore Gages offer precision, a full compliment of features and excellent value.

| 3089 Dial Bore Gages | | | |
|---|---|---|---|
| **Cat. No.** | **EDP** | **Measuring Range** | **Probe Depth** |
| 3089Z-131-715J | 12456 | 0.7-1.5" | 6" |
| 3089Z-131-1424J | 12457 | 1.4-2.4" | 6" |
| 3089Z-131-26J | 12458 | 2-6" | 6" |
| 3089M-181-35J | 72948 | 18-35mm | 300mm |
| 3089M-181-50J | 72949 | 35-50mm | 300mm |
| 3089M-181-160J | 72950 | 50-160mm | 300mm |
| **3089 Dial Bore Gage Sets** | | | |
| **Cat. No.** | **EDP** | **Measuring Range** | **Set Includes** |
| 3089Z-131-26J | 13016 | 0.7-6" | 3089Z-131-715J, 3089Z-131-1424J, 3089Z-131-26J |
| S3089MZ-181-160J | 13015 | 50-160mm | 3089M-181-35J, 3089M-181-50J, 3089M-181-160J |
| **3089 Dial Bore Gage Accessories** | | | |
| **Cat. No.** | **EDP** | **Description** | |
| 3089-RS36B | 72969 | Bore gage setter with 36 Grade B gage blocks | |

### Features

- Ergonomic design with non-slip insulating grip
- Carbide contacts for extended wear
- 2-point contact
- All anvils laser marked for easy selection
- Gage chart for quick and easy anvil selection
- Includes sturdy aluminum case with cutouts for gage and all accessories
- Resolution: .0005"

3089Z-131-26J

3089-RS36B

3089Z-131-26J

Probes

# Dial Bore Gages

## 82, 82M Dial Bore Gages

### .107-1.565"/2.7-39.75MM

Dial bore gages are available in convenient sets or with individual probes and dial indicators. Each set consists of a dial indicator, a body and actuating rod, two adjusting wrenches and the probes as specified below.

The head may be ordered separately (includes dial indicator, body, and two adjusting wrenches). Individual probes can also be ordered as listed. All probes are furnished with an actuating rod. These gages are also available with electronic indicators by special order.

Measurements are taken by comparison so some type of set master should be used as a reference standard. We recommend setting as close to the hole being measured as possible, and this can be easily done with gage blocks or with a micrometer. We can also furnish master setting rings by request.

- The split-ball contact is self-centering and the two-point contact makes the gage useful for detecting hole geometry problems like taper, bell-mouth and out-of-roundness
- Reads to .0001" and 0.002mm
- Useful for controlling approach to tolerance without removing the workpiece from a machine
- Interchangeable probes are hard chrome plated and polished
- Sets furnished in attractive, protective case.

| A Sets Individual Probes Only for 82 and 82M Bore Gages | | | |
|---|---|---|---|
| | | Range | |
| Cat. No. | EDP | in | mm |
| 82A2 | 66015 | .107-.140 | 2.7-3.55 |
| 82A3 | 66016 | .139-.172 | 3.55-4.35 |
| 82A4 | 66017 | .171-.203 | 4.35-5.15 |
| 82A5 | 66018 | .202-.234 | 5.15-5.95 |
| 82A6 | 66019 | .233-.266 | 5.9-6.76 |
| **B Sets Individual Probes Only for 82 and 82M Bore Gages** | | | |
| | | Range | |
| Cat. No. | EDP | in | mm |
| 82B2 | 66020 | .217-.281 | 5.5-7.15 |
| 82B3 | 66021 | .279-.344 | 7.1-8.75 |
| 82B4 | 66022 | .342-.405 | 8.7-10.3 |
| 82B5 | 66023 | .403-.469 | 10.25-11.9 |
| 82B6 | 66024 | .467-.532 | 11.9-13.5 |
| 82B7 | 66025 | .530-.594 | 13.5-15.1 |
| **C Sets Individual Probes Only for 82 and 82M Bore Gages** | | | |
| | | Range | |
| Cat. No. | EDP | in | mm |
| 82C2 | 66028 | .560-.690 | 14.2-17.5 |
| 82C3 | 66029 | .685-.815 | 17.4-20.7 |
| 82C4 | 66030 | .810-.940 | 20.6-23.9 |
| 82C5 | 66031 | .935-1.065 | 23.75-27.05 |
| 82C6 | 66032 | 1.060-1.190 | 26.9-30.2 |
| 82C7 | 66033 | 1.185-1.315 | 30.1- 33.4 |
| 82C8 | 66034 | 1.310-1.440 | 33.3-36.6 |
| 82C9 | 66035 | 1.435-1.565 | 36.5-39.75 |

All probes come complete with actuating rod.

| 82 Dial Bore Gages | | | | | | | | |
|---|---|---|---|---|---|---|---|---|
| Complete Sets | | Heads | | | | | | |
| Cat. No. | EDP | Cat. No. | EDP | Total Range | Number of Probes | Range Each Probe | Max. Bore Depth | Graduation |
| 82AZ | 55791 | 82AB1 | 66013 | .107-.266" | 5 | .107-.140"; .139-.172"; .171-.203"; .202-.234"; .233-.266" | 13/16" | .0001" |
| 82BZ | 55792 | 82AB1 | 66013 | .217-.594" | 6 | .217-.281"; .279-.344"; .342-.405"<br>.403-.469"; .467-.532"; .530-.594" | 1-1/2"<br>1-3/4" | .0001" |
| 82CZ | 55793 | 82C1 | 66026 | .560-1.565" | 8 | .560-.690"; .685-.815"; .810-.940"<br>.935-1.065"; 1.060-1.190"; 1.185-1.315"; 1.310-1.440"; 1.435-1.565" | 2-1/2"<br>5"* | .0001" |
| **82M Dial Bore Gages** | | | | | | | | |
| Complete Sets | | Heads | | | | | | |
| Cat. No. | EDP | Cat. No. | EDP | Total Range | Number of Probes | Range Each Probe | Max. Bore Depth | Graduation |
| 82MAZ | 66010 | 82MAB1 | 66014 | 2.7-6.76mm | 5 | 2.7-3.55mm; 3.55-4.35mm; 4.35-5.15mm; 5.15-5.95mm; 5.95-6.76mm | 20.6mm | 0.002 mm |
| 82MBZ | 66011 | 82MAB1 | 66014 | 5.5-15.1mm | 6 | 5.5-7.15mm; 7.1-8.75mm; 8.7-10.3mm<br>10.25-11.9mm; 11.9-13.5mm; 13.5-15.1mm | 38mm<br>44mm | 0.002 mm |
| 82MCZ | 66012 | 82MC1 | 66027 | 14.2-39.75mm | 8 | 14.2-17.5mm; 17.4-20.7mm; 20.6-23.9mm<br>23.75-27.05mm; 26.9-30.2mm; 30.1-33.4mm; 33.3-36.6mm; 36.5-39.75mm | 63mm<br>125mm* | 0.002 mm |

* Includes insertion of gage body into bore.

# Dial Bore Gages

## 84A, 84MA Dial Bore Gages

### 1-1/2 – 12-1/8"/38-317.5MM

These fractional bore gages allow for bore measurements beyond the size range of our 82 Bore Gage.

They are comparison gages and should be set with a master ring gage, gage blocks with parallel jaws, outside micrometers or vernier calipers. Ring gages are available by request, quoted by application. Good practice is to set the gage to zero, as near to the desired dimension as possible.

Gages are well balanced, easy to use and have the following features:

- Can be easily held to inspect bores and hole sizes without removing the workpiece
- An adjustable range screw and two centralizing plungers provide accurate, three-point contact for tool alignment in larger bores
- All contacts and centralized plungers are hardened tool steel for wear and spring-loaded for sensitivity
- The housing and knurled handle are aluminum for light weight and good balance
- Dial indicators have jewel bearings for sensitivity
- Bore depths are also available up to 12" (300mm) in 1" (25mm) increments on special order
- Furnished in finished wood case
- Available with longer reach lengths, carbide contacts or electronic indicators with output capability from our special order division

84AZ-111-5

84MAZ-161-6

**84A Dial Bore Gages (1-1/2 - 12-1/2" Range)**

| Cat. No. | EDP | Total Range with Extension | Ext. | Range Each Extension (inches) | Max. Bore Depth | Plunger Travel | Indicator Grad. |
|---|---|---|---|---|---|---|---|
| 84AZ-111-4J<br>84AZ-134-4J | 00026<br>00030 | 1-1/2-3" | 12 | 1.500-1.625", 1.625-1.750", 1.750-1.875", 1.875-2.000", 2.000-2.125", 2.125-2.250", 2.250-2.375", 2.375-2.500", 2.500-2.625", 2.625-2.750", 2.750-2.875", 2.875-3.000" | 3" | .020" | .0001"<br>.0005" |
| 84AZ-111-5J<br>84AZ-134-5J | 00027<br>00031 | 3-5-1/16" | 11 | 3.000-3.187", 3.187-3.375", 3.375-3.562", 3.562-3.750", 3.750-3.937", 3.937-4.125", 4.150-4.312", 4.312-4.500", 4.500-4.687", 4.687-4.875", 4.875-5.062" | 6" | .030" | .0001"<br>.0005" |
| 84AZ-111-6J<br>84AZ-134-6J | 00028<br>00032 | 5-8" | 4 | 5.000-5.750", 5.750-6.500", 6.500-7.250", 7.250-8.000" | 6" | .030" | .0001"<br>.0005" |
| 84AZ-111-7J<br>84AZ-134-7J | 00029<br>00033 | 8-12-1/2" | 3 | 8.000-9.500", 9.500-11.000", 11.000-12.500" | 7" | .030" | .0001"<br>.0005" |

**84MA Dial Bore Gages (38.1 - 317.5mm Range)**

| Catalog No. | EDP | Total Range with Extension | Ext. | Range Each Extension (mm) | Max. Bore Depth | Plunger Travel | Indicator Grad. |
|---|---|---|---|---|---|---|---|
| 84MAZ-161-4J<br>84MAZ-181-4J | 00034<br>00038 | 3.175-76.2mm | 12 | 38.1-41.28mm, 41.28-44.45mm, 44.45-47.62mm, 47.62-50.8mm, 50.8 -53.98mm, 53.98-57.15mm, 57.15-60.32mm, 60.32-63.5mm, 63.5-66.68mm, 66.68-69.85mm, 69.85-73.02mm, 73.02-76.2mm | 75mm | 0.51mm | 0.002 mm<br>0.01 mm |
| 84MAZ-161-5J<br>84MAZ-181-5J | 00035<br>00039 | 76.2-128.58mm | 11 | 76.2-80.96mm, 80.96-85.72mm, 85.72-90.49mm, 90.49-95.25mm, 95.25-100.01mm, 100.01-104.78mm, 104.78-109.54mm, 109.54- 114.3mm, 114.3-119.06mm, 119.06-123.82mm, 123.82-128.58mm | 150mm | 0.76mm | 0.002 mm<br>0.01 mm |
| 84MAZ-161-6J<br>84MAZ-181-6J | 00036<br>00040 | 127-203.2mm | 4 | 127-146.05mm, 146.05-165.1mm, 165.1-184.15mm, 184.15-203.2mm | 150mm | 0.76mm | 0.002 mm<br>0.01 mm |
| 84MAZ-161-7J<br>84MAZ-181-7J | 00037<br>00041 | 203.2-317.5mm | 3 | 203.2 - 241.3mm, 241.3 - 279.4mm, 279.4 - 317.5mm | 175mm | 0.76mm | 0.002 mm<br>0.01 mm |

# Bore Gage Systems

## AccuPlug™ Bore Gages

The AccuPlug consists of interchangeable indicators, handles, plugs, extensions and depth stops for a custom bore gage built specifically for your application needs.

The robust, easy to use AccuPlug range is designed to give the operator greater speed of use, unmatched measuring accuracy and superb repeatability, especially in harsh shop-floor environments. Advanced hand held ergonomics allied to an ingenious mechanical/electronic system render AccuPlug the easiest to operate Starrett bore gaging system to date. The flexible nature of the AccuPlug™ range means that they can be supplied fitted with easy to read electronic indicators (ideal for automatic data collection) or conventional analogue indicators.

### Features

- Ranges from 0.2362 - 11.0236" (6 - 280mm)
- Tough, robust construction
- Easy-to-use
- High accuracy dedicated plug-gages
- Flexible, modular
- Hand-held measurement
- Cost-effective
- High visibility display
- Protective indicator shroud (with some indicators)
- All setting rings supplied as standard with UKAS calibration certificates
- Repeatability: ≤1µm
- Setting by means of a setting ring
- Quick and reliable measurement
- 2 - point measurement as standard
- Blind bore available
- Depth-stops available
- Extensions available for deeper bores
- Guide chamfer for easy entry into bore
- High durability, long-life plugs and contacts
- Easy to clean
- Plug body coatings: Hard-chrome (standard), T.i.N, Plain steel
- Measuring contacts: Tungsten carbide (standard), hard-chrome, ruby, ceramic

# Bore Gage Systems

## AccuPlug™ Bore Gages

| AccuPlug™ | | | |
|---|---|---|---|
| **Regular Bore*** | | | |
| **Cat. No.** | **in** | **mm** | **Thread** |
| 802P-001 | 0.2362-0.7874 | 6-20 | M6 x 0.75 |
| 802P-002 | 0.5906-0.9843 | 15-25 | M10 x 1 |
| 802P-003 | 0.9843-1.3780 | 25-35 | M10 x 1 |
| 802P-004 | 1.3780-1.7717 | 35-45 | M10 x 1 |
| 802P-005 | 1.7717-2.3622 | 45-60 | M10 x 1 |
| 802P-006 | 2.3622-3.1496 | 60-80 | M10 x 1 |
| 802P-007 | 3.1496-3.9370 | 80-100 | M10 x 1 |
| 802P-008 | 3.9370-4.9213 | 100-125 | M10 x 1 |
| 802P-009 | 4.9213-5.9055 | 125-150 | M10 x 1 |
| 802P-010 | 5.9055-6.8898 | 150-175 | M10 x 1 |
| 802P-011 | 6.8898-7.8740 | 175-200 | M10 x 1 |
| 802P-012 | 7.8740-8.8583 | 200-225 | M10 x 1 |
| 802P-013 | 8.8583-9.8425 | 225-250 | M10 x 1 |
| 802P-014 | 9.8425-11.0236 | 250-280 | M10 x 1 |
| **Blind Bore*** | | | |
| **Cat. No.** | **in** | **mm** | **Thread** |
| 802BB-001 | 0.2362-0.7874 | 6-20 | M6 x 0.75 |
| 802BB-002 | 0.5906-0.9843 | 15-25 | M10 x 1 |
| 802BB-003 | 0.9843-1.3780 | 25-35 | M10 x 1 |
| 802BB-004 | 1.3780-1.7717 | 35-45 | M10 x 1 |
| 802BB-005 | 1.7717-2.3622 | 45-60 | M10 x 1 |
| 802BB-006 | 2.3622-3.1496 | 60-80 | M10 x 1 |
| 802BB-007 | 3.1496-3.9370 | 80-100 | M10 x 1 |
| 802BB-008 | 3.9370-4.9213 | 100-125 | M10 x 1 |
| 802BB-009 | 4.9213-5.9055 | 125-150 | M10 x 1 |

*See Technical Specifications for plug ranges.

| Indicators | | |
|---|---|---|
| **Cat No.** | **EDP** | **Description** |
| 2900-4 | 09983 | 0.00005"/.001mm Electronic Indicator, Full Function, 3/8" Stem |
| 2900-4M | 09988 | 0.001mm Electronic Indicator, Full Functions, 8mm Stem |
| F2720AD | 49500 | 0.00005"/.001mm Electronic Indicator, Full Function with TIR Runout and Hold Function, 3/8" Stem, Analog Digital Display |
| F2720ADM | 49504 | 0.00005"/.001mm Electronic Indicator, Full Function with TIR Runout and Hold Function, 8mm Stem, Analog Digital Display |
| 647 | 00001 | 0.00005" Mechanical Indicator with 3/8" Stem |
| 647M | 00002 | 0.001mm Mechanical Indicator with 8mm Stem |
| **M 10 Thread** | **M 6 Thread** | **Mini Electronic Indicator** |
| 802H10MI-001 | 802H6MI-001 | With Shroud and M10 Holder Short 8mm Stem |
| 802H10MI-002 | 802H6MI-002 | With Shroud and M10 Holder Long 8mm Stem |

**Setting Rings**

| Cat. No. | Diameter Range in | mm |
|---|---|---|
| 802RX-001 | 0.2362-0.3937 | 6-10 |
| 802RX-002 | 0.3937-0.7874 | 10-20 |
| 802RX-003 | 0.7874-0.9843 | 20-25 |
| 802RX-004 | 0.9843-1.1811 | 25-30 |
| 802RX-005 | 1.1811-1.5748 | 30-40 |
| 802RX-006 | 1.5748-1.9685 | 40-50 |
| 802RX-007 | 1.9685-2.3622 | 50-60 |
| 802RX-008 | 2.3622-2.7559 | 60-70 |
| 802RX-009 | 2.7559-3.1496 | 70-80 |
| 802RX-010 | 3.1496-3.5433 | 80-90 |
| 802RX-011 | 3.5433-3.9370 | 90-100 |
| 802RX-012 | 3.9370-4.5276 | 100-115 |
| 802RX-013 | 4.5276-5.1181 | 115-130 |
| 802RX-014 | 5.1181-5.7087 | 130-145 |
| 802RX-015 | 5.7087-6.2992 | 145-160 |
| 802RX-016 | 6.2992-6.6929 | 160-170 |
| 802RX-017 | 6.6929-7.0866 | 170-180 |
| 802RX-018 | 7.0866-7.4803 | 180-190 |
| 802RX-019 | 7.4803-7.8740 | 190-200 |
| 802RX-020 | 7.8740-8.2677 | 200-210 |
| 802RX-021 | 8.2677-8.6614 | 210-220 |
| 802RX-022 | 8.6614-9.0551 | 220-230 |
| 802RX-023 | 9.0551-9.4488 | 230-240 |
| 802RX-024 | 9.4488-9.8425 | 240-250 |
| 802RX-025 | 9.8425-10.2362 | 250-260 |
| 802RX-026 | 10.2362-10.6299 | 260-270 |
| 802RX-027 | 10.6299-11.0236 | 270-280 |

*Available with purchase of AccuPlug™

**Depth Stop**

| Cat. No. | Diameter Range in | mm |
|---|---|---|
| 802DS-001 | 2.3622-0.3347 | 6-8.5 |
| 802DS-002 | 0.3347-0.5118 | 8.5-13 |
| 802DS-003 | 0.5118-0.6890 | 13-17.5 |
| 802DS-004 | 0.6890-0.9843 | 17.5-25 |
| 802DS-005 | 0.9843-1.2795 | 25-32.5 |
| 802DS-006 | 1.2795-1.5748 | 32.5-40 |
| 802DS-007 | 1.5748-1.8701 | 40-47.5 |
| 802DS-008 | 1.8701-2.1654 | 47.5-55 |
| 802DS-009 | 2.1654-2.4606 | 55-62.5 |
| 802DS-010 | 2.4606-2.7559 | 62.5-70 |
| 802DS-011 | 2.7559-3.0512 | 70-77.5 |
| 802DS-012 | 3.0512-3.3465 | 77.5-85 |
| 802DS-013 | 3.3465-3.6417 | 85-92.5 |
| 802DS-014 | 3.6417-3.9370 | 92.5-100 |

**Accessories**

| M 6 Thread Cat No. | Description | M 10 Thread Cat No. | Description |
|---|---|---|---|
| 802H6-001 | M6 Holder Short 3/8" Stem | 802H10-001 | M10 Holder Short 3/8" Stem |
| 802H6-002 | M6 Holder Long 3/8" Stem | 802H10-002 | M10 Holder Long 3/8" Stem |
| 802H6-003 | M6 Holder Short 8mm Stem | 802H10-003 | M10 Holder Short 8mm Stem |
| 802H6-004 | M6 Holder Long 8mm Stem | 802H10-004 | M10 Holder Long 8mm Stem |
| 802E6-001 | M6 100mm Extension | 802E10-001 | M10 100mm Extension |

# Bore Gage Systems

## AccuPlug™ Bore Gaging Technical Specifications

### Indicator Units 8mm and 3/8"

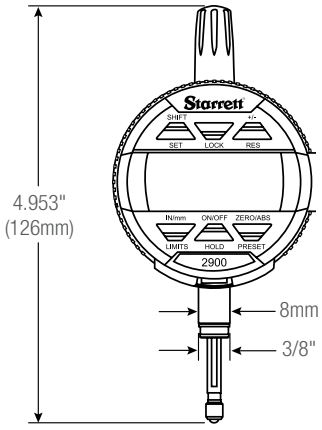


2900-4 and 2900-4M

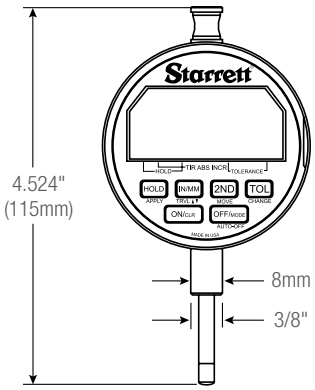


F2720AD and F2720ADM

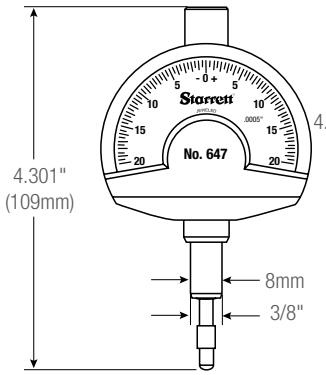


647 and 647M

### Mini Indicator Units

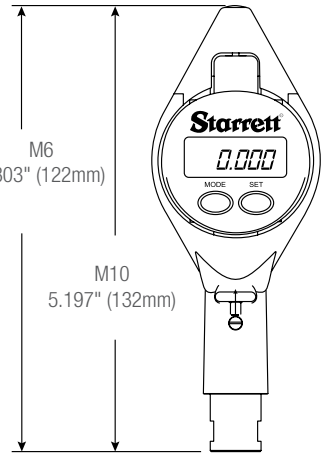


Mini indicator with shroud, short handle - M6 and M10

### AccuPlugs

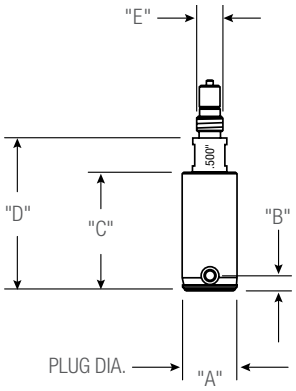


M6 AccuPlug

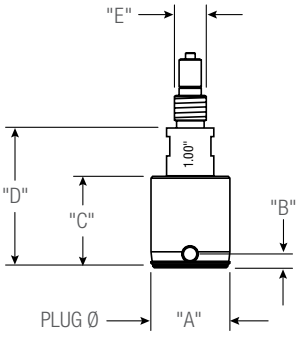


M10 AccuPlug

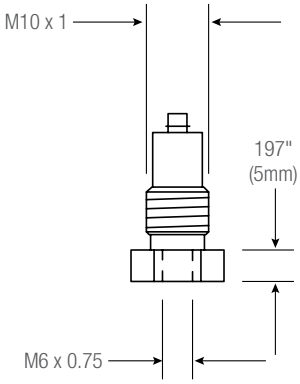


M6 to M10 Adapter

### Accessories

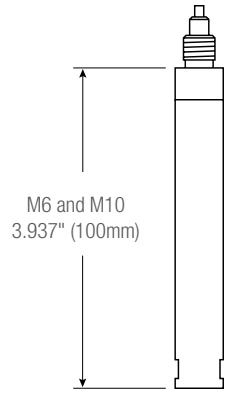


100mm Extension - M6 and M10

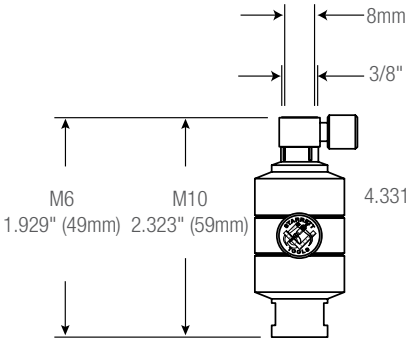


Short holder M6 and M10 with 3/8" or 8mm stem

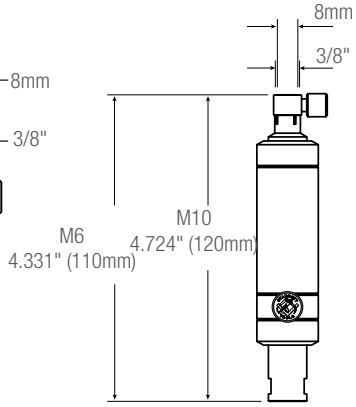


Long holder M6 and M10 with 3/8" or 8mm stem

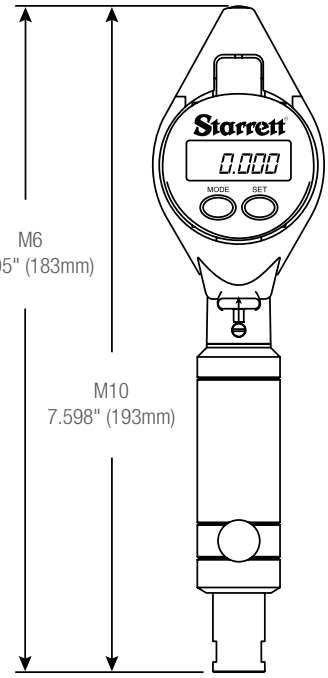


Mini indicator with shroud, long handle - M6 and M10

**AccuPlug Dimension Specifications**

| Plug Diameter "A" | | Range | | B | | C | | D | | |
|---|---|---|---|---|---|---|---|---|---|---|
| in | mm | in | mm | in | mm | in | mm | in | mm | E |
| 0.2362-0.7874 | 6-20 | .006 | 0.15 | .138 | 3.5 | 1.063 | 27 | 1.378 | 35 | M6 x 0.75 |
| 0.5906-1.7717 | 15-45 | .008 | 0.20 | .177 | 4.5 | 1.102 | 28 | 1.713 | 43.5 | M10 x 1 |
| 1.7717- 2.756 | 45-70 | .008 | 0.20 | .217 | 5.5 | 1.102 | 28 | 1.732 | 44 | M10 x 1 |
| 2.756-11.0236 | 70-280 | .008 | 0.20 | .217" | 5.5 | 1.378 | 35 | 1.732 | 44 | M10 x 1 |